* 0000800000001 *

Cambridge Assessment International Education

# Cambridge International AS & A Level

CANDIDATE NAME

CENTRE NUMBER

CANDIDATE NUMBER

*1300575550*

**PHYSICS** **9702/33**

Paper 3 Advanced Practical Skills 1 **October/November 2024**

**2 hours**

You must answer on the question paper.

You will need: The materials and apparatus listed in the confidential instructions

**INSTRUCTIONS**

- Answer **all** questions.
- Use a black or dark blue pen. You may use an HB pencil for any diagrams or graphs.
- Write your name, centre number and candidate number in the boxes at the top of the page.
- Write your answer to each question in the space provided.
- Do **not** use an erasable pen or correction fluid.
- Do **not** write on any bar codes.
- You will be allowed to work with the apparatus for a maximum of 1 hour for each question.
- You should record all your observations in the spaces provided in the question paper as soon as these observations are made.
- You may use a calculator.
- You should show all your working and use appropriate units.

**INFORMATION**

- The total mark for this paper is 40.
- The number of marks for each question or part question is shown in brackets [ ].

| For Examiner's Use | |
|---|---|
| 1 | |
| 2 | |
| Total | |

This document has **12** pages. Any blank pages are indicated.


© UCLES 2024

[Turn over

**BLANK PAGE**

DO NOT WRITE IN THIS MARGIN
DO NOT WRITE IN THIS MARGIN
DO NOT WRITE IN THIS MARGIN
DO NOT WRITE IN THIS MARGIN
DO NOT WRITE IN THIS MARGIN

**You may not need to use all of the materials provided.**

**1** In this experiment, you will determine the resistivity of a metal.

**(a)** ● Set up the circuit shown in Fig. 1.1.

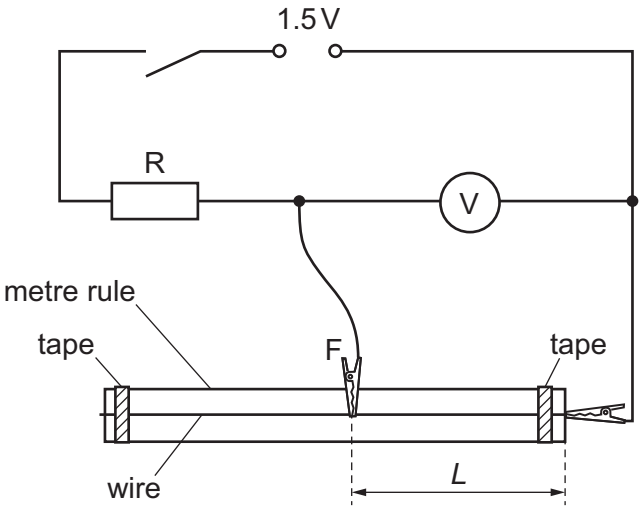


**Fig. 1.1** (not to scale)

- The distance between the two crocodile clips is *L*. The reading on the voltmeter is *V*.

  Adjust the position of crocodile clip F so that *L* is approximately 45 cm.
- Close the switch.
- Record the value of *L* and the voltmeter reading *V*.

*L* = ..... cm

*V* = ..... V

- Open the switch.

[1]

DO NOT WRITE IN THIS MARGIN
DO NOT WRITE IN THIS MARGIN
DO NOT WRITE IN THIS MARGIN
DO NOT WRITE IN THIS MARGIN
DO NOT WRITE IN THIS MARGIN

**(b)** Vary $L$ in the range $15.0\,\text{cm} \leqslant L \leqslant 95.0\,\text{cm}$ by adjusting the position of F. For each position of F, measure $L$ and $V$. Repeat until you have six sets of values of $L$ and $V$.

Record your results in a table. Include values of $\frac{1}{L}$ and $\frac{1}{V}$ in your table.

[8]

**(c) (i)** Plot a graph of $\frac{1}{V}$ on the $y$-axis against $\frac{1}{L}$ on the $x$-axis. [3]

**(ii)** Draw the straight line of best fit. [1]

**(iii)** Determine the gradient and $y$-intercept of this line.

gradient = .....

$y$-intercept = .....

[2]

DO NOT WRITE IN THIS MARGIN

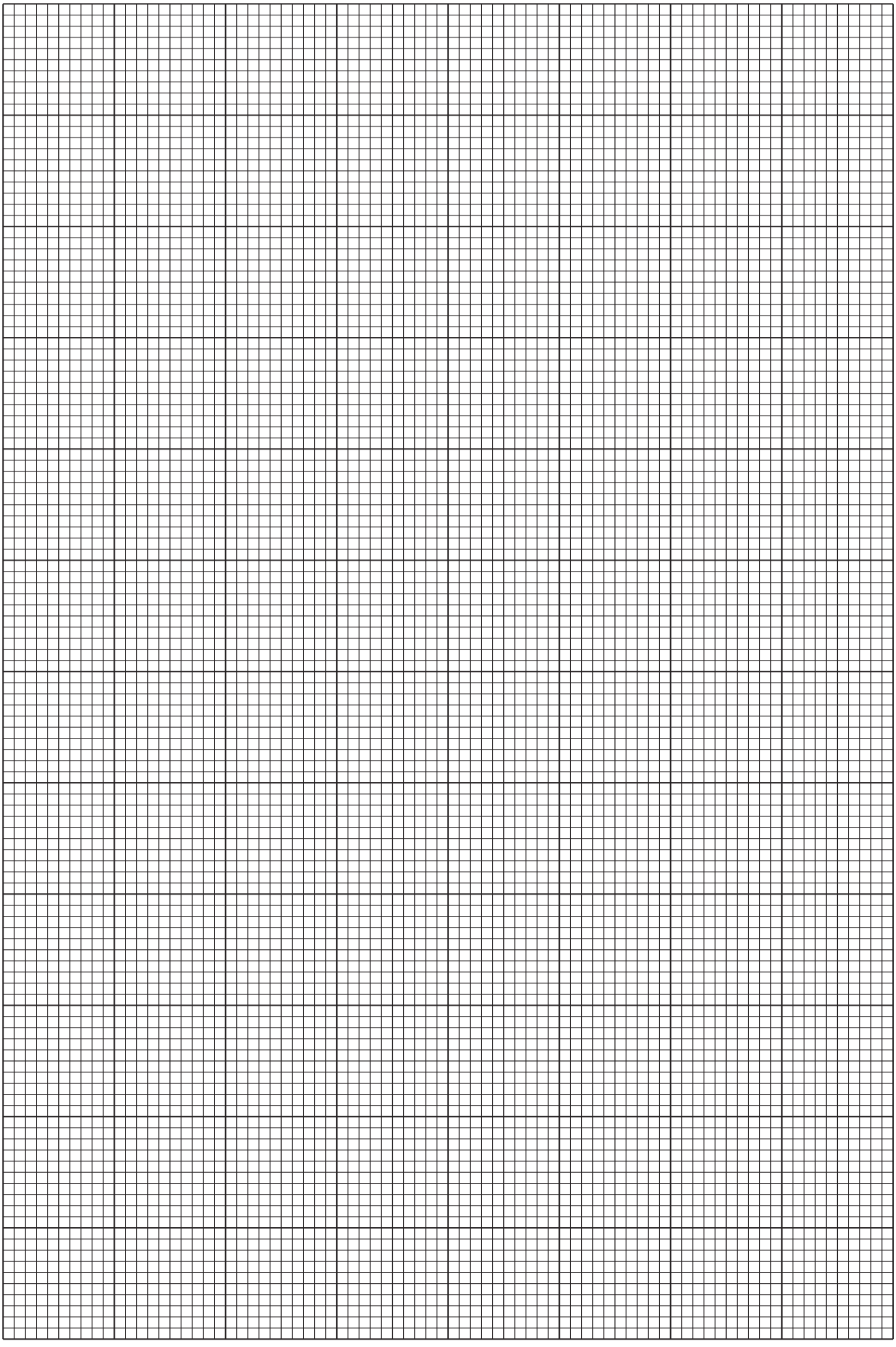

DO NOT WRITE IN THIS MARGIN
DO NOT WRITE IN THIS MARGIN
DO NOT WRITE IN THIS MARGIN
DO NOT WRITE IN THIS MARGIN
DO NOT WRITE IN THIS MARGIN

**(d)** It is suggested that the quantities $V$ and $L$ are related by the equation

$$\frac{1}{V} = \frac{J}{L} + W$$

where $J$ and $W$ are constants.

Using your answers in **(c)(iii)**, determine the values of $J$ and $W$.
Give appropriate units.

$J$ = .....

$W$ = .....
[2]

**(e)** **(i)** Use a micrometer to measure the diameter $d$ of the wire.

$d$ = ..... [2]

**(ii)** Theory suggests that

$$J = \frac{\pi d^2 WR}{4\rho}$$

where $R$ is 33 Ω and $\rho$ is the resistivity of the metal of the wire.

Using your answers in **(d)** and **(e)(i)**, determine a value for $\rho$.

$\rho$ = ..... Ω m [1]

[Total: 20]

DO NOT WRITE IN THIS MARGIN
DO NOT WRITE IN THIS MARGIN
DO NOT WRITE IN THIS MARGIN
DO NOT WRITE IN THIS MARGIN
DO NOT WRITE IN THIS MARGIN

**You may not need to use all of the materials provided.**

**2** In this experiment, you will investigate the movement of a ball.

**(a)** You are provided with two table tennis balls A and B, each attached to a string.

The mass of A and its string is *m*.

Use the balance to measure *m*.

*m* = ..... g [1]

**(b) (i)** • Attach the clamp to the stand using the boss.

• Place both strings between the two wooden strips and secure the wooden strips in the clamp, as shown in Fig. 2.1.

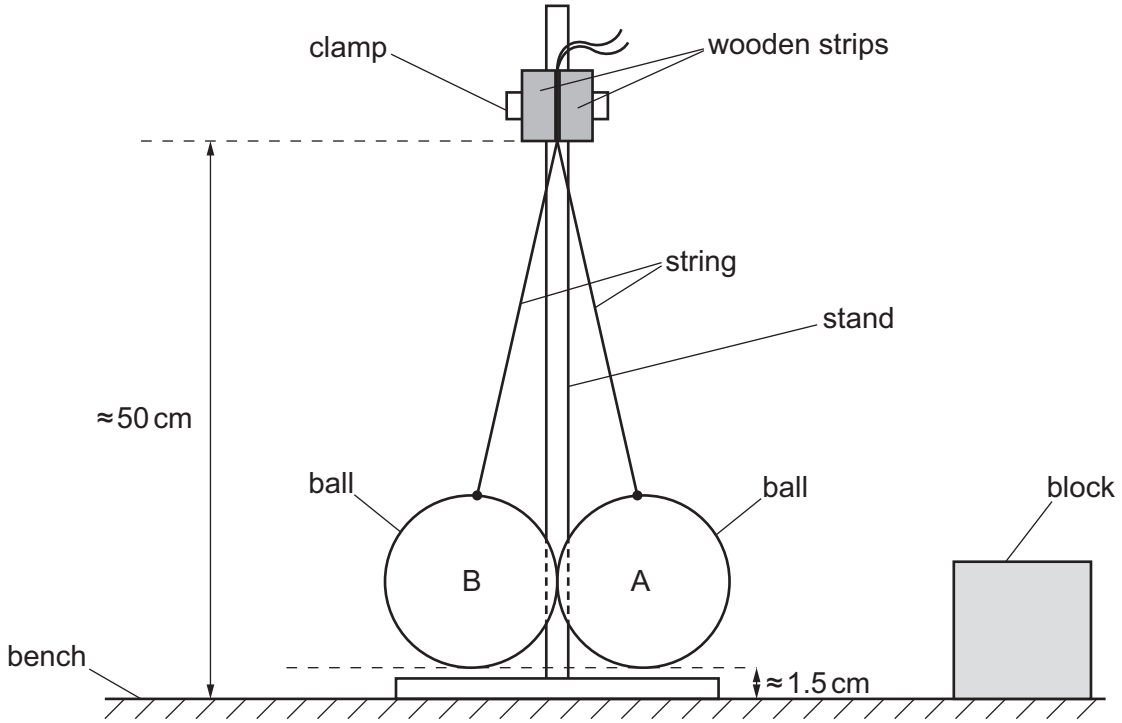


**Fig. 2.1** (not to scale)

• Adjust the apparatus so that the bottoms of the two wooden strips are approximately 50 cm above the bench and the bottoms of the two balls are approximately 1.5 cm above the bench.

DO NOT WRITE IN THIS MARGIN
DO NOT WRITE IN THIS MARGIN
DO NOT WRITE IN THIS MARGIN
DO NOT WRITE IN THIS MARGIN
DO NOT WRITE IN THIS MARGIN

- Displace A and adjust the position of the block so that, when they are touching, the centre of A is level with the top of the block, as shown in Fig 2.2.

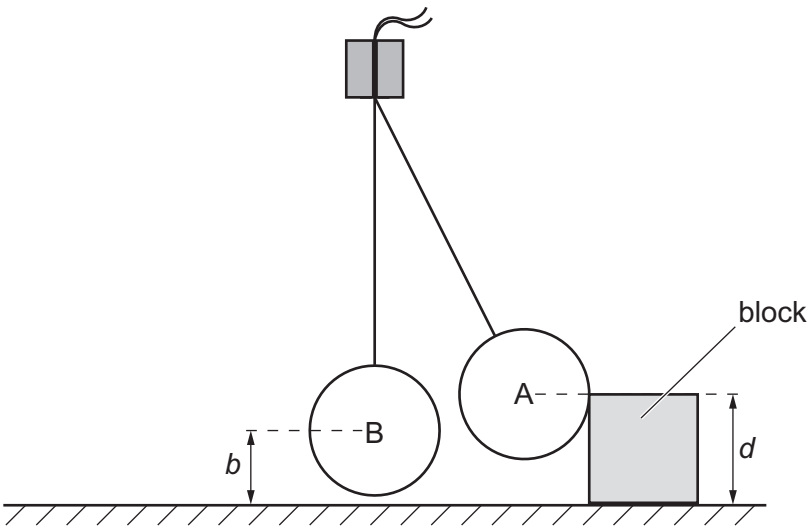


**Fig. 2.2** (not to scale)

- When A is in this position, the distance between the centre of B and the bench is *b*, as shown in Fig. 2.2.

  The distance between the top of the block and the bench is *d*.

  Measure and record *b* and *d*.

  *b* = ..... cm

  *d* = ..... cm

- Calculate $\sqrt{d-b}$.
  Give an appropriate unit.

  $\sqrt{d-b}$ = .....
  [2]

**(ii)** Justify the number of significant figures that you have given for your value of $\sqrt{d-b}$.

.....

.....

..... [1]

DO NOT WRITE IN THIS MARGIN
DO NOT WRITE IN THIS MARGIN
DO NOT WRITE IN THIS MARGIN
DO NOT WRITE IN THIS MARGIN
DO NOT WRITE IN THIS MARGIN

**(iii)** ● Release A so that it moves towards B.

● When A hits B, it causes B to move.

At the maximum height of ball B, the vertical distance between the centre of B and the bench is *H*, as shown in Fig. 2.3.

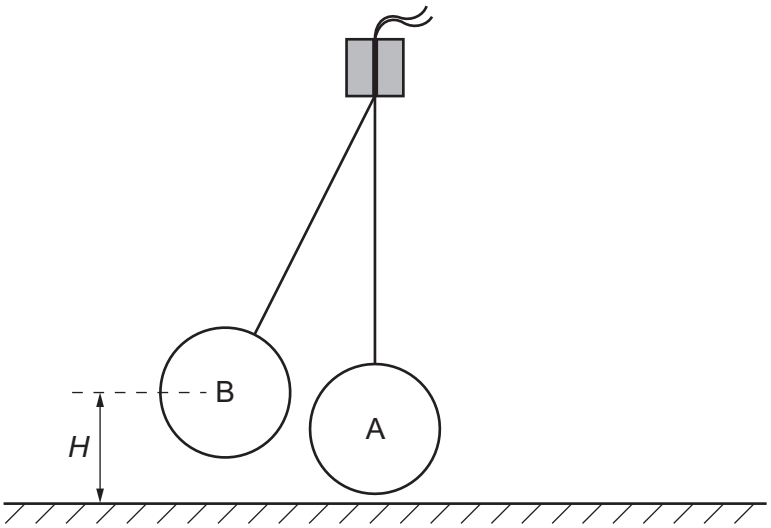


**Fig. 2.3** (not to scale)

Determine *H*.

*H* = ..... cm [2]

**(iv)** Estimate the percentage uncertainty in your value of *H*. Show your working.

percentage uncertainty = ..... % [1]

**(v)** With this arrangement of the apparatus, the total mass of A is equal to *m* measured in **(a)**.

● Record the total mass *M* of A.

*M* = ..... g

● Calculate $\sqrt{H-b}$.

$\sqrt{H-b}$ = .....
[1]

DO NOT WRITE IN THIS MARGIN
DO NOT WRITE IN THIS MARGIN
DO NOT WRITE IN THIS MARGIN
DO NOT WRITE IN THIS MARGIN
DO NOT WRITE IN THIS MARGIN

**(c)** ● Use the adhesive putty to attach the 10.0 g slotted mass to A.

The total mass $M$ of A is now equal to the sum of $m$ and the mass of the slotted mass.

● Displace A and adjust the position of the block so that, when they are touching, the centre of A is level with the top of the block, as shown in Fig. 2.2.

● Repeat **(b)(iii)** and **(b)(v)**.

$H$ = ..... cm

$M$ = ..... g

$\sqrt{H-b}$ = .....
[2]

**(d)** It is suggested that the relationship between $H$, $b$, $m$, $M$ and $d$ is

$$\frac{1}{\sqrt{H-b}} = k + \frac{m}{2M\sqrt{d-b}}$$

where $k$ is a constant.

Using your data, calculate two values of $k$.

first value of $k$ = .....

second value of $k$ = .....
[1]

DO NOT WRITE IN THIS MARGIN

**(e)** It is suggested that the percentage uncertainty in the values of $k$ is 15%.

Using this uncertainty, explain whether your results support the relationship in **(d)**.

.....

.....

.....

..... [1]

DO NOT WRITE IN THIS MARGIN
DO NOT WRITE IN THIS MARGIN
DO NOT WRITE IN THIS MARGIN
DO NOT WRITE IN THIS MARGIN
DO NOT WRITE IN THIS MARGIN

**(f) (i)** Describe **four** sources of uncertainty or limitations of the procedure for this experiment.

For any uncertainties in measurement that you describe, you should state the quantity being measured and a reason for the uncertainty.

1 .....

.....

2 .....

.....

3 .....

.....

4 .....

.....

[4]

**(ii)** Describe **four** improvements that could be made to this experiment. You may suggest the use of other apparatus or different procedures.

1 .....

.....

2 .....

.....

3 .....

.....

4 .....

.....

[4]

[Total: 20]

DO NOT WRITE IN THIS MARGIN

DO NOT WRITE IN THIS MARGIN

DO NOT WRITE IN THIS MARGIN

DO NOT WRITE IN THIS MARGIN

DO NOT WRITE IN THIS MARGIN

Permission to reproduce items where third-party owned material protected by copyright is included has been sought and cleared where possible. Every reasonable effort has been made by the publisher (UCLES) to trace copyright holders, but if any items requiring clearance have unwittingly been included, the publisher will be pleased to make amends at the earliest possible opportunity.

To avoid the issue of disclosure of answer-related information to candidates, all copyright acknowledgements are reproduced online in the Cambridge Assessment International Education Copyright Acknowledgements Booklet. This is produced for each series of examinations and is freely available to download at www.cambridgeinternational.org after the live examination series.

Cambridge Assessment International Education is part of Cambridge Assessment. Cambridge Assessment is the brand name of the University of Cambridge Local Examinations Syndicate (UCLES), which is a department of the University of Cambridge.